SKYLARK

FR-W2202-62L

62″ Ceiling Fan

MODERN FORMS
SMART FANS

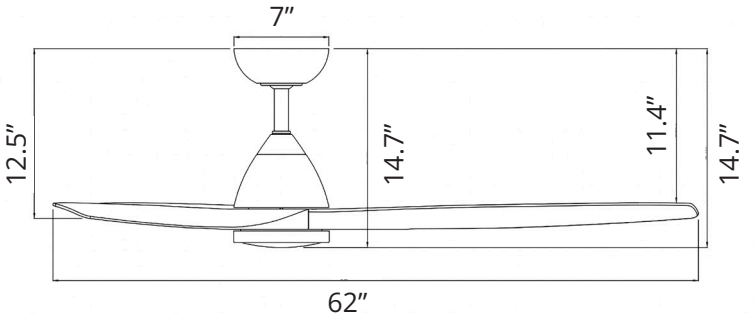

PRODUCT DESCRIPTION

Introduce sleek sophistication to your home with the Skylark Smart Fan. Spectacular new finishes of soft brass and brushed nickel are unveiled in our Modern Forms Smart Fan collection. The three smartly designed blades circulate air with an agile yet robust gracefulness, bringing incomparable comfort and illumination with an integrated LED luminaire, throughout your space. The convenient, 6-speed set-up can be controlled locally using the included Bluetooth remote control or remotely using the Modern Forms app.

FEATURES

- 6 fan speeds through both Summer and Winter Modes
- Silent DC motor
- LED luminaire included
- Includes remote control
- Optional wall control sold separately
- Compatible with Modern Forms app

AIRFLOW/ENERGY EFFICIENCY

Weighted-Average/High Airflow CFM:	4524/6920
Weighted-Average/High Energy Use (W):	20/28
Estimated Yearly Energy Cost ($):	6
Weighted-Average/High Efficiency (CFM/W):	227
Max RPM:	148

ORDER NUMBER

Model	Housing		Blade	
FR-W2202-62L	**BN**	*Brushed Nickel*	**EB**	*Ebony*
	MB	*Matte Black*	**MB**	*Matte Black*
	SB	*Soft Brass*	**MB**	*Matte Black*
	SB	*Soft Brass*	**MW**	*Matte White*
	MW	*Matte White*	**MW**	*Matte White*
	BZ	*Bronze*	**WO**	*White Oak*

Example: **FR-W2202-62L-MB**

SPECIFICATIONS

Construction:	Aluminum, Steel, ABS
Blade:	14º Pitch, 62″ sweep
Downrod:	.75W x 4.5H included
Mounting Slope:	Up to 30°
Wire:	80″
Hanging Weight:	17 lbs.
Total Power:	48W
Standards:	UL/cUL Wet Location listed, Title 24 JA8-2016 Compliant, Title 20, Energy Star
Motor Type:	120 x D-25 sensorless DC motor

WIRELESS PERFORMANCE

Wi-Fi Range:	Up to 150 ft*
Bluetooth Range:	Up to 150 ft*

LUMINAIRE PERFORMANCE

Light Source:	LED
Light Wattage:	21W
Lumens/ Delivered Lumens:	1991-2159 (Based on CCT) / 1365
Dimming:	Integrated
CRI:	90
CCT Color Temperature:	3000K (2700K/4000K/5000K selectable)
Rated Life:	50,000 hours

***Range may vary based on application and surroundings.**
***This fan comes uni-pack - blade select options are not available.**
***Brushed Nickel and Soft Brass are not intended for coastal environments.**

The Modern Forms app synchronizes seamlessly with smart home devices you already own

modernforms.com
Phone (800) 526.2588
Fax (800) 526.2585

Headquarters/Eastern Distribution Center
44 Harbor Park Drive
Port Washington, NY 11050

Central Distribution Center
1600 Distribution Ct
Lithia Springs, GA 30122

Western Distribution Center
1750 Archibald Avenue
Ontario, CA 91760

Modern Forms retains the right to modify the design of our products at any time as part of the company's continuous improvement program. *DEC 2023*

SKYLARK

FR-W2202-62L

62″ Ceiling Fan

MODERN FORMS
SMART FANS

OPTIONAL ACCESSORIES

Bluetooth Wall Control		**F-WCBT**	**WT** White	Control fan speed and light brightness, and switch between Summer and Winter Modes. Additional Wall Controls can be purchased separately for multiple location control.
Bluetooth Remote Control		**F-RCBT**	**WT** White	Control fan speed and light brightness, and switch between Summer and Winter Modes. Compatible with Modern Forms Smart Fans. Includes easy-to-install wall cradle and batteries.
Downrod		**XF-12** 12IN **XF-18** 18IN **XF-24** 24IN **XF-36** 36IN **XF-48** 48IN **XF-60** 60IN **XF-72** 72IN		All our downrods are .75 (in) I.D. and are threaded on the motor end to create an extra layer of security and allow for adjustments in the field.
Downrod Couplers		**XF-I**		Connects two downrods together.
Sloped Ceiling Kit		**XF-SCK**		Designed to accommodate buildings with steeper sloped ceilings up to 45° or 12/12 pitch.

Examples: Wall Control: **F-WCBT-WT**, Remote Control: **F-RCBT-WT**, Downrod: **XF-12-BN**, Downrod Coupler: **XF-I-MB**, Sloped Ceiling Kit: **XF-SCK-MB**

SUGGESTED DOWNROD HEIGHT USAGE

Ceiling Height	15'	14'	13'	12'	11'	10'	9'
Downrod	72"	60"	48"	36"	24"	18"	12"

SLOPED CEILING DEGREE CONVERSION CHART

Degree	4-8°	9-13°	14-17°	18-21°	22-25°	26-29°	30-32°	33-35°	36-38°	39-41°	42-44°	45°
Ceiling Slope	1/12	2/12	3/12	4/12	5/12	6/12	7/12	8/12	9/12	10/12	11/12	12/12
Pitch	pitch	pitch	pitch	pitch	pitch	pitch	pitch	pitch	pitch	pitch	pitch	pitch

Supplied mounting brackets allow mounting on ceiling slopes up to 30° (7/12 pitch). Optional slope kit allows mounting on ceilings up to 45° (12/12 pitch). The receiver will mount inside canopy up to 45°.

NOTE: Recommended maximum downrod length of 72″ with 80″ lead wire

Modern Forms retains the right to modify the design of our products at any time as part of the company's continuous improvement program. *DEC 2023*