ZEPHYR

FR-W2006-52L

52″ Ceiling Fan

MODERN FORMS
SMART FANS

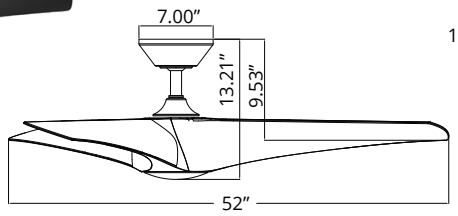

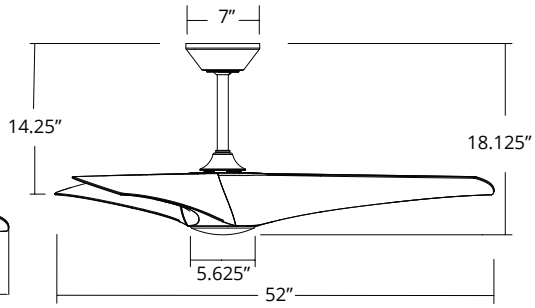

PRODUCT DESCRIPTION

With smart controls and a discreet DC Motor, Zephyr is a form of luxury that comes in a stylish three blade design. A robust LED luminaire with artisan-crafted opal glass and thick aerodynamically soundless blades round out the design. Available in four rich architectural finishes. The Modern Forms app allows for full control of one or many smart fans and integration with current smart home control systems including Control4 and Samsung SmartThings.

FEATURES

- 6 fan speeds through both Summer and Winter Modes
- Silent DC motor
- Optional luminaire cover is included
- Includes BT remote control
- Optional wall control sold separately
- Compatible with Modern Forms app

AIRFLOW/ENERGY EFFICIENCY

Weighted-Average/High Airflow CFM:	2975/4655**
Weighted-Average/High Energy Use (W):	13/22
Estimated Yearly Energy Cost ($):	6
Weighted-Average/High Efficiency (CFM/W):	141/141
Max RPM:	161

ORDER NUMBER

Model	Housing		Blade	
FR-W2006-52L	**GH**	*Graphite*	**WW**	*Weathered Wood*
	MB	*Matte Black*	**DK**	*Distressed Koa*
	MB	*Matte Black*	**MB**	*Matte Black*
	MW	*Matte White*	**MW**	*Matte White*
	BZ	*Bronze*	**WO**	*White Oak*

Example: **FR-W2006-52L-MB**

***Results may vary based on application and surroundings.**
***This fan comes uni-pack - blade select options are not available**
**** Airflow tested with 8-inch rod**

SPECIFICATIONS

FR-W2006-52

Construction:	Aluminum, ABS
Blade:	16° Pitch, 52″ sweep
Downrod:	3/4"W + 4.5 and 8"H included
Mounting Slope:	Up to 30°
Wire:	80″
Hanging Weight:	17 lbs
Total Power:	49.5W
Standards:	UL/cUL Wet Location listed, Title 24 JA8-2016 Compliant, Title 20, Energy Star rated
Motor Type:	120 x 20 sensorless DC motor

WIRELESS PERFORMANCE

Wi-Fi Range:	Up to 150 ft*
Bluetooth Range:	Up to 150 ft*

LUMINAIRE PERFORMANCE

Light Source:	LED
Light Wattage:	21W
Lumens/Delivered Lumens:	1991-2159 (Based on CCT)/1326
Dimming:	Integrated
CRI:	90
Color Temperature:	2700K, 3000K, 4000K, 5000K
Rated Life:	50,000 hours

The Modern Forms app synchronizes seamlessly with smart home devices you already own

WORKS WITH amazon alexa · works with Google Assistant · Works with SmartThings · Bluetooth® · Control4 · JOSH

modernforms.com
Phone (800) 526.2588
Fax (800) 526.2585

Headquarters/Eastern Distribution Center
44 Harbor Park Drive
Port Washington, NY 11050

Central Distribution Center
1600 Distribution Ct
Lithia Springs, GA 30122

Western Distribution Center
1750 Archibald Avenue
Ontario, CA 91760

Modern Forms retains the right to modify the design of our products at any time as part of the company's continuous improvement program. JUL 2020

ZEPHYR

FR-W2006-52L

52″ Ceiling Fan

MODERN FORMS
SMART FANS

OPTIONAL ACCESSORIES

Bluetooth Wall Control		**F-WCBT**	**WT** White	Control fan speed and light brightness, and switch between Summer and Winter Modes. Additional Wall Controls can be purchased separately for multiple location control.
Bluetooth Remote Control		**F-RCBT**	**WT** White	Control fan speed and light brightness, and switch between Summer and Winter Modes. Compatible with Moder Forms Smart Fans. Includes easy-to-install wall cradle and batteries.
Downrod		**XF-12** 12IN **XF-18** 18IN **XF-24** 24IN **XF-36** 36IN **XF-48** 48IN **XF-60** 60IN **XF-72** 72IN		All our downrods are .75 (in) and are threaded on the motor end to create an extra layer of security and allow for adjustments in the field.
Downrod Couplers		**XF-I**		Connects two downrods together.
Sloped Ceiling Kit		**XF-SCK**		Designed to accommodate buildings with steeper sloped ceilings up to 45° or 12/12 pitch.

Examples: Wall Control: **F-WCBT-WT**, Remote Control: **F-RCBT-WT**, Downrod: **XF-12-BN**, Downrod Coupler: **XF-I-MB**, Sloped Ceiling Kit: **XF-SCK-MW**

SUGGESTED DOWNROD HEIGHT USAGE

Ceiling Height	15'	14'	13'	12'	11'	10'	9'
Downrod	72"	60"	48"	36"	24"	18"	12"

SLOPED CEILING DEGREE CONVERSION CHART

Degree	4-8°	9-13°	14-17°	18-21°	22-25°	26-29°	30-32°	33-35°	36-38°	39-41°	42-44°	45°
Ceiling Slope	1/12	2/12	3/12	4/12	5/12	6/12	7/12	8/12	9/12	10/12	11/12	12/12
Pitch	pitch	pitch	pitch	pitch	pitch	pitch	pitch	pitch	pitch	pitch	pitch	pitch

Supplied mounting brackets allow mounting on ceiling slopes up to 30° (7/12 pitch). Optional slope kit allows mounting on ceilings up to 45° (12/12 pitch). The receiver will mount inside canopy up to 45°.

NOTE: Recommended maximum downrod length of 72″ with 80″ lead wire

Modern Forms retains the right to modify the design of our products at any time as part of the company's continuous improvement program. JUL 2020