A1RS-2491-DW, A1RS-2591-DW (A,B)

QUARTUS ASTRO 2" NEW CONST Millwork Housing

AiSPiRE® A WAC GROUP COMPANY

SPECIFICATIONS

Input	Universal 120-277V AC 50/60 Hz
Standards:	ETL & cETL, IC-rated, Airtight SPCL (Spray Foam Compatible Luminaire), up to R6.8 per inch, as per UL 1598
Dimming:	Electronic Low Voltage (ELV): 100%-1% TRIAC: 100%-1%, 0-10V: 100-1
Mounting:	New construction housings included with universal mounting brackets and hanger bars Ceiling Cutout (Round): Ø 3-1/8" Ceiling Cutout (Square): 2-9/16" x 2-9/16" See next page for ceiling thickness information
Construction:	20 Gauge galvanized steel
Warranty:	8 year product warranty

Fixture Type: _____

Catalog Number: _____

Project: _____

Location: _____

Round, New Construction Millwork

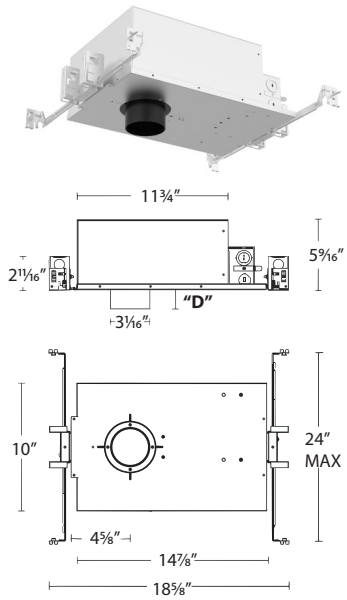

Model	Collar Depth "**D**"
A1RS-2491**A**-DW	*3/4"*
A1RS-2491**B**-DW	*1-1/2"*

Square, New Construction Millwork

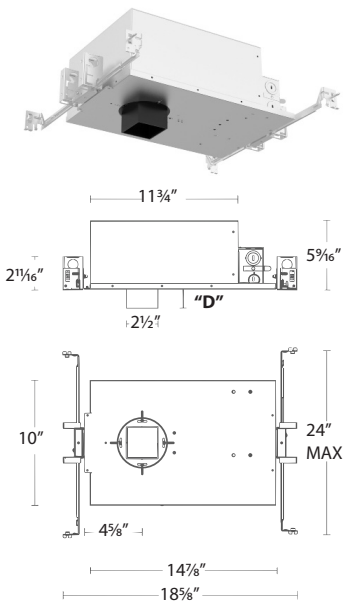

Model	Collar Depth "**D**"
A1RS-2591**A**-DW	*3/4"*
A1RS-2591**B**-DW	*1-1/2"*

HOUSINGS	*Model*	*Ceiling Thickness*		*Power*	*Rating*
New Construction Millwork Round	**A1RS-2491A-DW**	*A: 0.25" to 0.75"*	*Airtight*	*15W*	*IC*
	A1RS-2491B-DW	*B: 0.75" to 1.5"*	*Airtight*	*15W*	*IC*
New Construction Millwork Square	**A1RS-2591A-DW**	*A: 0.25" to 0.75"*	*Airtight*	*15W*	*IC*
	A1RS-2591B-DW	*B: 0.75" to 1.5"*	*Airtight*	*15W*	*IC*

A1RS-_____-DW

Example: **A1RS-2491A-DW**

aispire.com
Phone (800) 526.2588
Fax (800) 526.2585

Headquarters
44 Harbor Park Drive,
Port Washington, NY 11050

Georgia Distribution Center
1600 Distribution Ct,
Lithia Springs, GA 30122

Texas Distribution Center
1700 S J Elmer Weaver Fwy Suite 100,
Cedar Hill, TX 75104

California Distribution Center
1750 S Archibald Ave,
Ontario, CA 91761

AISPIRE retains the right to modify the design of our products at any time as part of the company's continuous improvement program.

A1RS-2491-DW, A1RS-2591-DW (A,B)

QUARTUS ASTRO 2" NEW CONST Millwork Housing

REPLACEMENT DRIVER

Housing Model	*Power*	*Replacement Driver Model*
A1RS-2491A-DW, A1RS-2491B-DW, A1RS-2591A-DW, A1RS-2591B-DW	*15W*	D-R2FN-1

MILLWORK HOUSING APPLICATION TABLE FOR WOOD/MILLWORK CEILING

Millwork Housing	Trim Model	Trim Description	Ceiling Thickness				
			1/4"	1/2"	3/4"	1"	1-1/2"
A1RS-2491A-DW Round 1/4" to 3/4"	A1RS-D47M-DW	Downlight	Yes	Yes	Yes	N/A	
	A1RS-A47M-DW	Adjustable	Yes, to 35°	Yes, to 35°	Yes, to 35°		
	A1RS-W47A-DW	Wall Wash	Yes	Yes	Yes		
A1RS-2491B-DW Round 3/4" to 1-1/2"	A1RS-D47M-DW	Downlight	N/A		Yes	Yes	Yes
	A1RS-A47M-DW	Adjustable			Yes, to 12°	Yes, to 12°	Yes, to 12°
	A1RS-W47A-DW	Wall Wash			Yes	Yes	Yes
A1RS-2591A-DW Square 1/4" to 3/4"	A1RS-D57M-DW	Downlight	Yes	Yes	Yes	N/A	
	A1RS-A57M-DW	Adjustable	Yes, to 25°	Yes, to 25°	Yes, to 25°		
	A1RS-W57A-DW	Wall Wash	Yes	Yes	Yes		
A1RS-2591B-DW Square 3/4" to 1-1/2"	A1RS-D57M-DW	Downlight	N/A		Yes	Yes	Yes
	A1RS-A57M-DW	Adjustable			Yes, to 8°	Yes, to 8°	Yes, to 8°
	A1RS-W57A-DW	Wall Wash			Yes	Yes	Yes

MILLWORK INSTALLATION OVERVIEW

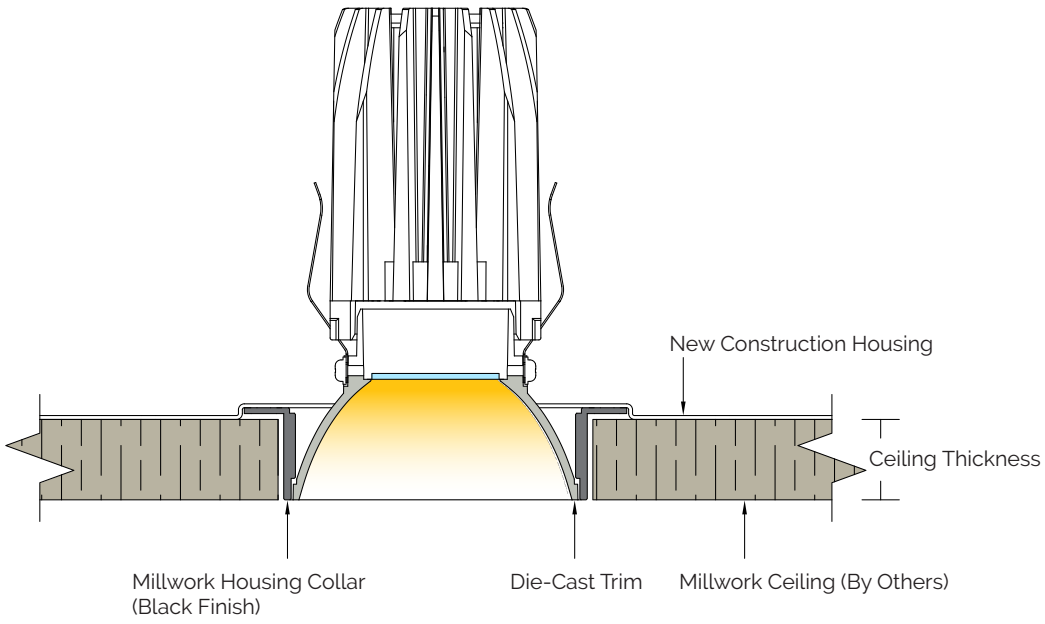

aispire.com
Phone (800) 526.2588
Fax (800) 526.2585

Headquarters
44 Harbor Park Drive,
Port Washington, NY 11050

Georgia Distribution Center
1600 Distribution Ct,
Lithia Springs, GA 30122

Texas Distribution Center
1700 S J Elmer Weaver Fwy Suite 100,
Cedar Hill, TX 75104

California Distribution Center
1750 S Archibald Ave,
Ontario, CA 91761

AISPIRE retains the right to modify the design of our products at any time as part of the company's continuous improvement program.