INSTALLATION INSTRUCTIONS

OUTDOOR TRACK COLORSCAPING LUMINAIRE

X-10-CS

WARNING

IMPORTANT: NEVER attempt to do any work without shutting off the electricity.

1. Read all instructions before installing.
2. System is intended for installation by a qualified electrician in accordance with the National Electrical Code and local regulations.
3. Place the wall switch in the "OFF" position.
4. Go to the main fuse box, or circuit breaker. Unscrew the fuse(s) or switch "OFF" the circuit breaker switch(es) that control the power to the space that you are working on.

CAUTION

- All parts must be used as indicated in these instructions. Do not substitute any parts, leave parts out, or use any parts that are worn out or broken. Failure to follow this instruction may invalidate the UL listing of this fixture.
- Luminaire is only for use with low voltage landscape lighting power units with a maximum output rating of 15 volts, 300 watts per secondary, unless evaluated for other uses.

AVERTISSEMENT

IMPORTANT : Coupez l'électricité avant TOUTE manipulation.

- Lisez toutes les instructions avant d'installer.
- Système est destiné à être installé par un électricien qualifié en conformité avec le code national de l'électricité et les règlements locaux.
- Placez l'interrupteur mural en position d'arrêt (« OFF »).
- Toujours mettre le fusible ou le disjoncteur en position arrêt dans la pièce ou des travaux électriques sont prévus

MISE EN GARDE

- Toutes les pièces doivent être utilisées tel qu'il est indiqué dans ces instructions. Ne remplacez pas les pièces, n'en laissez pas de côté et ne les utilisez pas si elles sont usées ou brisées. Le non-respect de ces instructions peut annuler l'homologation UL du luminaire.
- Ce luminaire est destiné uniquement à être utilisé avec des alimentation pour éclairage paysager basse tension, dont la puissance maximale est de 15 volts et 300 watts par circuit secondaire, sauf s'il a été évalué pour d'autres usages.

ADVERTENCIA

IMPORTANTE: NUNCA intente hacer trabajos sin desconectar el suministro eléctrico.

- Lea y comprenda todas las instrucciones e ilustraciones por completo antes de proceder con el ensamblaje e instalación de esta lámpara.
- Sistema está disenado para ser instalado por un electricista calificado, de acuerdo con el código eléctrico nacional y las normas locales.
- Coloque el interruptor de la pared en la posición "OFF" (APAGADO).
- Diríjase a la caja de fusibles o a la caja del interruptor de circuito principal en su hogar. Coloque el interruptor de alimentación principal en la posición "OFF" (APAGADO).

PRECAUCIÓN

- Todas las piezas deben usarse como lo indican estas instrucciones. No reemplace las piezas, noomita piezas durante la instalación ni utilice piezas gastadas o rotas. El incumplimiento de esta indicación podría invalidar la calificación UL esta lámpara.

This instruction applies to the model(s) below:

*Note: WAC Smart Transformer is required to power the fixture. (sold separately)

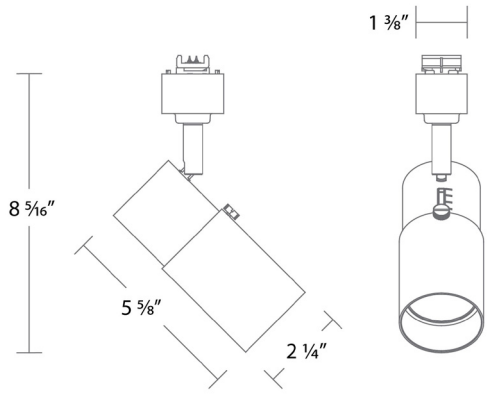

X-10-CS

waclighting.com
Phone (800) 526.2588
Fax (800) 526.2585

Headquarters/Eastern Distribution Center
44 Harbor Park Drive
Port Washington, NY 11050

Central Distribution Center
1600 Distribution Ct
Lithia Springs, GA 30122

Western Distribution Center
1750 Archibald Avenue
Ontario, CA 91760

WAC Lighting retains the right to modify the design of our products at any time as part of the company's continuous improvement program. AUG 2026

INSTALLATION INSTRUCTIONS

OUTDOOR TRACK COLORSCAPING LUMINAIRE

X-10-CS

FIXTURE INSTALLATION INTO X-TRACK:

1. Ensure the indicator lines on the adapter are properly aligned. If they are misaligned, rotate the upper U-shaped bracket 90° counter clockwise (see **FIG. 1**)

FIG.1

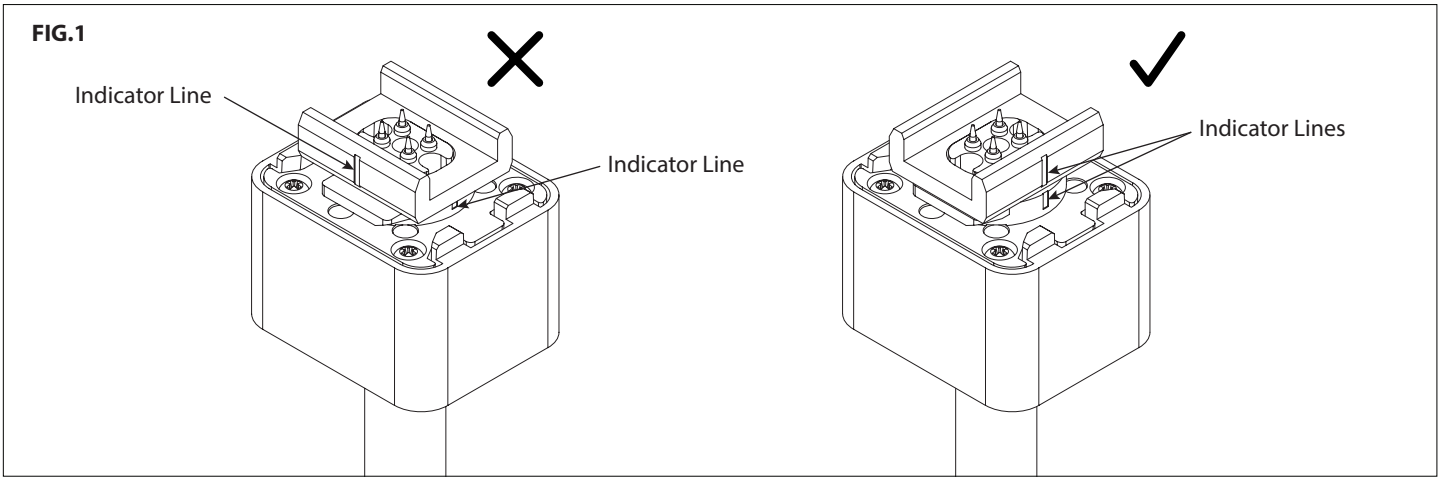

2. Apply small bead of dielectric grease (included) to cover each of the adapter pins (See **FIG. 2**).

FIG. 2

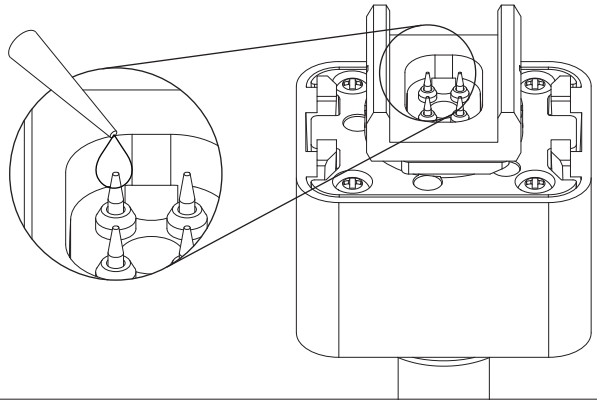

3. Raise fixture to the track. U-shaped bracket fits over the center cable channel. Using the stem, push upwards (See **FIG. 3**).

FIG. 3

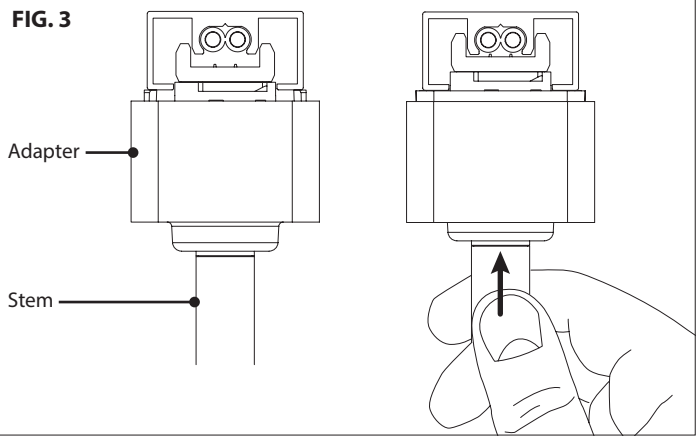

waclighting.com
Phone (800) 526.2588
Fax (800) 526.2585

Headquarters/Eastern Distribution Center
44 Harbor Park Drive
Port Washington, NY 11050

Central Distribution Center
1600 Distribution Ct
Lithia Springs, GA 30122

Western Distribution Center
1750 Archibald Avenue
Ontario, CA 91760

WAC Lighting retains the right to modify the design of our products at any time as part of the company's continuous improvement program. AUG 2026

4. With the stem still pushed up, grab the base of the adapter and twist 90° clockwise. The spring-loaded outer collar should click into place to lock the fixture to the track (See **FIG. 4**).

NOTE: Be sure to twist from the adapter (rectangular base), do not twist the fixture head during installation.

FIG. 4

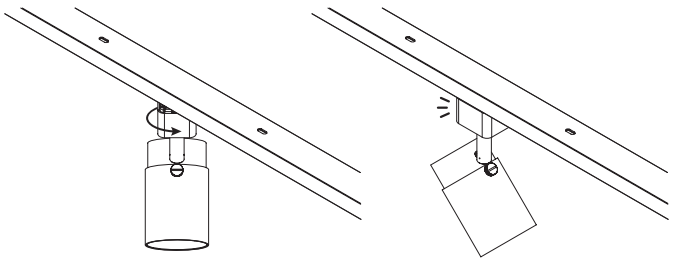

5. To remove the fixture, pull down on the adapter and rotate 90° counter clockwise (See **FIG. 5**)

FIG. 5

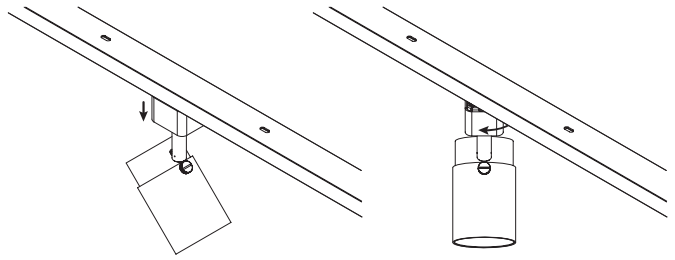

FIXTURE AIMING AND ADJUSTMENT:

1. Fixture is capable of 90° vertical tilt and 360° horizontal rotation (See **FIG. 6**)

FIG. 6

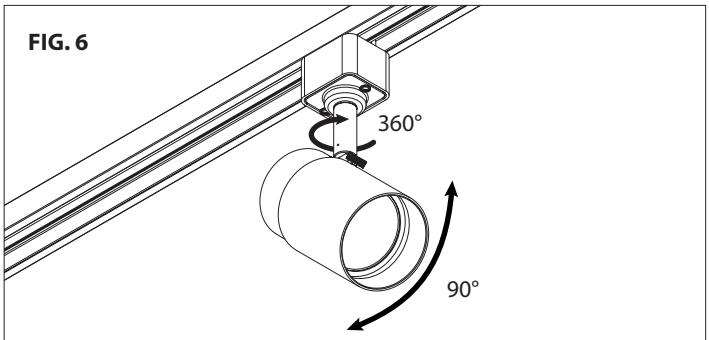

2. To adjust the beam angle, loosen thumb screw. Slide the shroud forward or back to until desired beam is achieved. Tighten thumb screw to lock (See **FIG. 7**).

FIG. 7

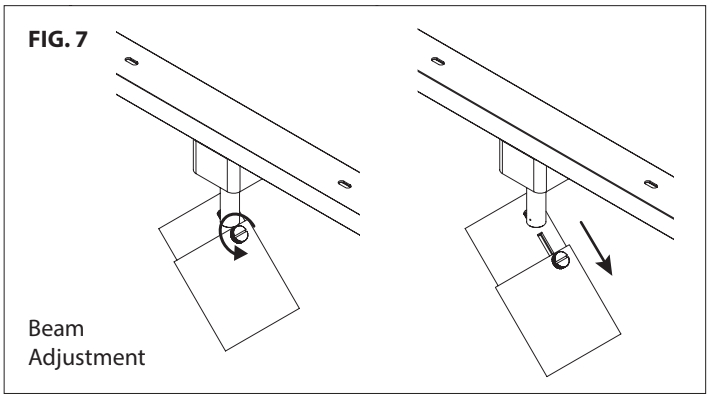

waclighting.com
Phone (800) 526.2588
Fax (800) 526.2585

Headquarters/Eastern Distribution Center
44 Harbor Park Drive
Port Washington, NY 11050

Central Distribution Center
1600 Distribution Ct
Lithia Springs, GA 30122

Western Distribution Center
1750 Archibald Avenue
Ontario, CA 91760

ADDING ACCESSORIES:

1. To add accessories to the fixture, an accessory holder is required (sold separately).

   Remove inner ring. Place up to two accessories inside holder. Replace inner ring to secure (See **FIG. 8**).

FIG. 8

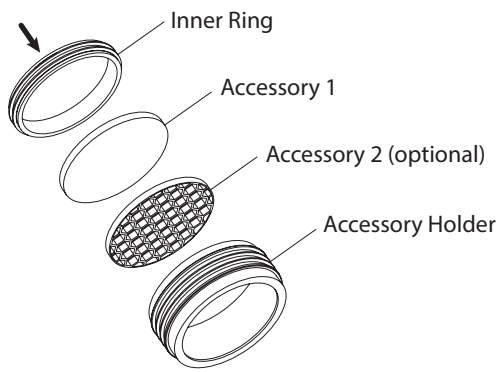

2. Press fit accessory holder into the front of the fixture (See **FIG. 9**).

To remove, gently press on the accessory in the center until a gap appears between the accessory and the accessory holder's front edge. Gently pull the accessory holder out from the front edge.

FIG. 9

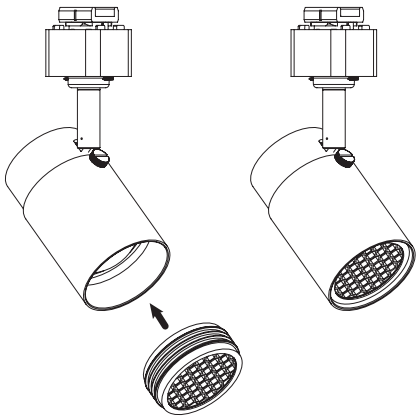

waclighting.com
Phone (800) 526.2588
Fax (800) 526.2585

Headquarters/Eastern Distribution Center
44 Harbor Park Drive
Port Washington, NY 11050

Central Distribution Center
1600 Distribution Ct
Lithia Springs, GA 30122

Western Distribution Center
1750 Archibald Avenue
Ontario, CA 91760