INSTALLATION INSTRUCTION

COLORSCAPING MINI ACCENT LIGHT

5810

WARNING

IMPORTANT: NEVER attempt to do any work without shutting o˜ the elec tricity.

1. Read all instructions before installing.
2. System is intended for installation by a qualiÿed electrician in accordance with the National Electrical Code and local regulations.
3. Place the wall switch in the "OFF" position.
4. Go to the main fuse box, or circuit breaker. Unscrew the fuse(s) or switch "OFF" the circuit breaker switch(es) that control the power to the space that you are working on.

CAUTION

- All parts must be used as indicated in these instructions. Do not substitute any parts, leave parts out, or use any parts that are worn out or broken. Failure to follow this instruction may invalidate the UL listing of this ÿxture.

AVERTISSEMENT

IMPORTANT : Coupez l'électricité avant TOUTE manipulation.

- Lisez toutes les instructions avant d'installer.
- Système est destiné à être installé par un électricien qualiÿé en conformité avec le code national de l'électricité et les règlements locaux.
- Placez l'interrupteur mural en position d'arrêt (« OFF »).
- Toujours mettre le fusible ou le disjoncteur en position arrêt dans la pièce ou des travaux électriques sont prévus

MISE EN GARDE

- Toutes les pièces doivent être utilisées tel qu'il est indiqué dans ces instructions. Ne remplacez pas les pièces, n'en laissez pas de côté et ne les utilisez pas si elles sont usées ou brisées. Le non-respect de ces instructions peut annuler l'homologation UL du luminaire.

ADVERTENCIA

IMPORTANTE: NUNCA intente hacer trabajos sin desconectar el suministro eléctrico.

- Lea y comprenda todas las instrucciones e ilustraciones por completo antes de proceder con el ensamblaje e instalación de esta lámpara.
- Sistema está disenado para ser instalado por un electricista caliÿcado, de acuerdo con el código eléctrico nacional y las normas locales.
- Coloque el interruptor de la pared en la posición "OFF" (APAGADO).
- Diríjase a la caja de fusibles o a la caja del interruptor de circuito principal en su hogar. Coloque el interruptor de alimentación principal en la posición "OFF" (APAGADO).

PRECAUCIÓN

- Todas las piezas deben usarse como lo indican estas instrucciones. No reemplace las piezas, noomita piezas durante la instalación ni utilice piezas gastadas o rotas. El incumplimiento de esta indicación podría invalidar la caliÿcación UL esta lámpara.

This instruction apply to the model(s) below:

**Note: WAC Smart Transformer is required to power the ÿxture. (sold separately)*

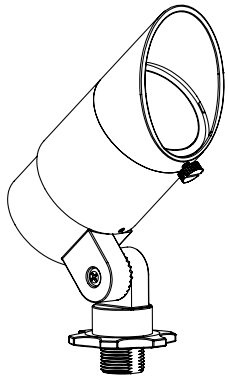

5810

waclighting.com
Phone (800) 526.2588
Fax (800) 526.2585

Headquarters, East Manufacturing Facility
44 Harbor Park Drive
Port Washington, NY 11050

South East Manufacturing Facility
1600 Distribution Ct
Lithia Springs, GA 30122

Central Manufacturing Facility
1700 South J Elmer Freeway, Ste 100
Cedar Hill, TX 75104

West Manufacturing Facility
1750 S Archibald Ave
Ontario, CA 91761

INSTALLATION INSTRUCTION
COLORSCAPING MINI ACCENT LIGHT
5810

MOUNTING ACCESSORIES



Mounting Stake
Qty: 1pcs

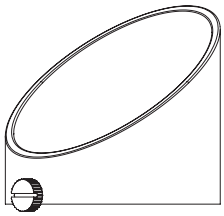

Adjustable Shroud
Qty: 1pc



Outdoor Rated Wire Nut
Qty: 2pcs

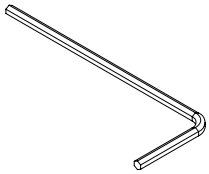

Hex Key
Qty: 1pcs

Step 1: Determining the location

1. Make sure your main power is o˜ .
2. At the point of installation, mount the stake by placing a piece of wood on the stake and hammering the wood. Hammer untill the bottom of the stake °ange is °ush with the g round.
3. In the case of hard soil, dig a hole and place the stake in so that the bottom of the stake °ange is °ush with the g round. Fill the rest of the hole with the removed soil and pack it tight to secure the stake.
4. Screw the ÿxture onto the stake provided, leading the wire from the ÿxture through the wire slot in the stake.

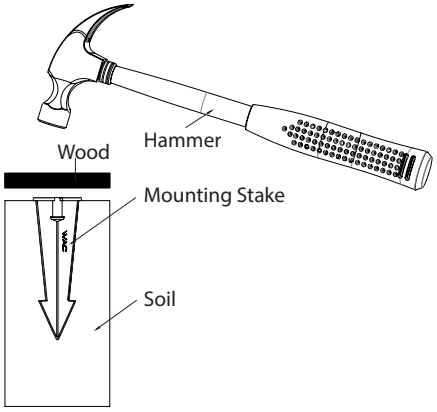

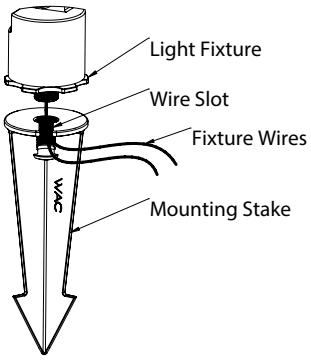

Step 2: Wiring the Fixture
**Note: WAC Smart Transformer is required to power the ÿxture. (sold separately)*

5. Cut the power supply wire from the transformer at the location of the ÿxture.
6. Separate the power supply wire into two individual wires by lightly pulling on each side so that a couple inches is separated.
7. Strip o˜ ½ inch of the insula ting material from each wire and connect one to each of the wires from the ÿxture using the outdoor rated wire nuts provided.

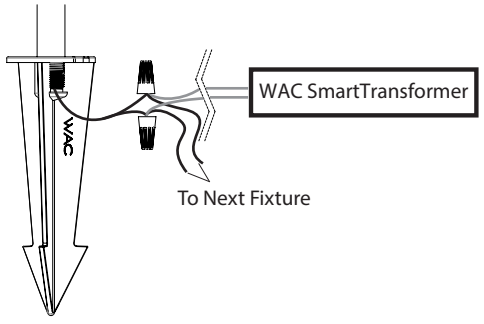

waclighting.com
Phone (800) 526.2588
Fax (800) 526.2585

Headquarters, East Manufacturing Facility
44 Harbor Park Drive
Port Washington, NY 11050

South East Manufacturing Facility
1600 Distribution Ct
Lithia Springs, GA 30122

Central Manufacturing Facility
1700 South J Elmer Freeway, Ste 100
Cedar Hill, TX 75104

West Manufacturing Facility
1750 S Archibald Ave
Ontario, CA 91761

Step 3: Installing the Fixture

8. Screw the fixture onto the stake provided, leading the wire from the fixture through the wire slot in the stake.

9. If desired, bury your wire by digging a small trench. When finish burying the wires, close the trench.

10. Repeat steps for other fixtures in the same electrical circuit.

11. Turn the main power supply back on and make sure the fixtures light up.

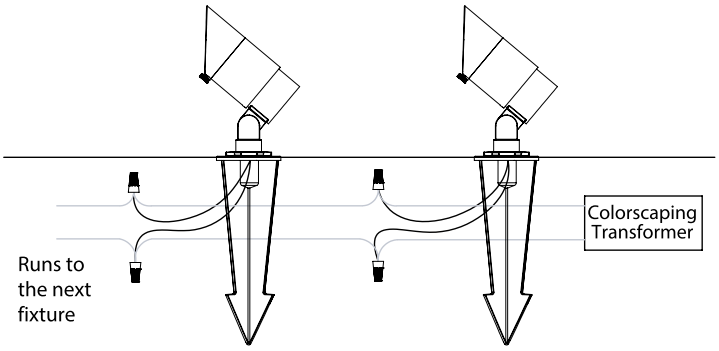

Note: To install multiple fixtures, follow diagram above.

Step 4: Aiming the Fixture

12. Tilting: Loosen the joint screw and adjust the head of the fixture to the desired direction before retightening the screw.

13. Rotating: Loosen the mounting knob and rotate the fixture to the desired position before retightening the knob.

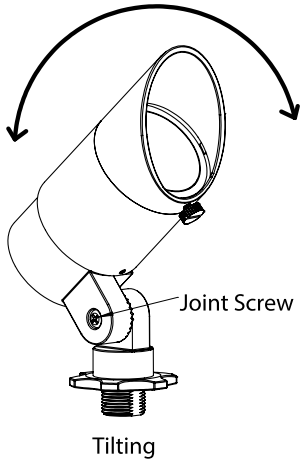

Tilting

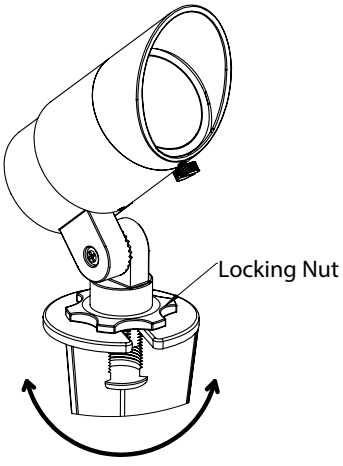

Rotating

waclighting.com
Phone (800) 526.2588
Fax (800) 526.2585

Headquarters, East Manufacturing Facility
44 Harbor Park Drive
Port Washington, NY 11050

South East Manufacturing Facility
1600 Distribution Ct
Lithia Springs, GA 30122

Central Manufacturing Facility
1700 South J Elmer Freeway, Ste 100
Cedar Hill, TX 75104

West Manufacturing Facility
1750 S Archibald Ave
Ontario, CA 91761

WAC Lighting retains the right to modify the design of our products at any time as part of the company's continuous improvement program. AUG 2026

Step 5: Beam Angle Adjustment:

1. Use the provided Hex Key to slightly loosen the set screw one or two turns. Do not remove set screw from the fixture.

CAUTION: Do not remove set screw from the fixture. It should only be removed from the fixture for servicing. Consult factory for service instruction.

1. Note the pre-determined beam angles on the fixture body: 20°, 35°, 45°, 60°
2. Slightly loosen the set screw. Do not remove the set screw from the ÿxture.
3. Hold the ÿxture body and move fixture shroud in and out for beam angle adjustment.
4. Tighten the thumb screw for fixed beam angle.

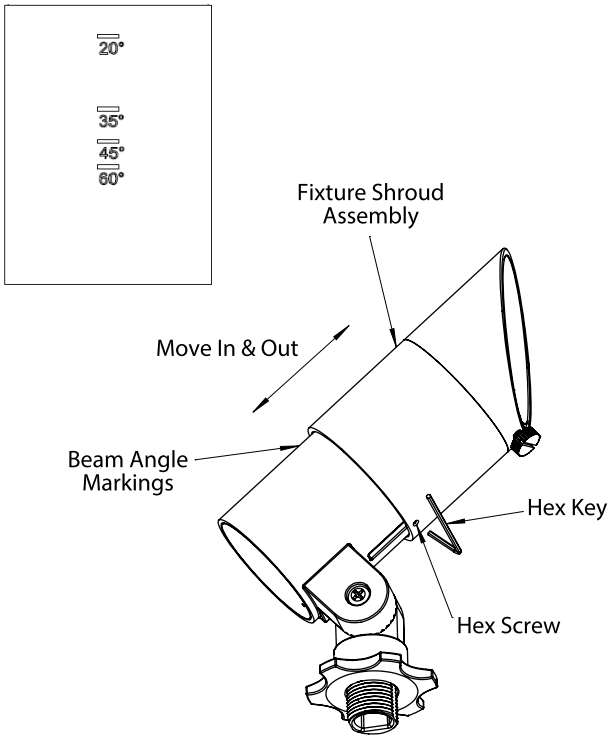

STEP 6: Shroud Adjustment:

1. Loosen the thumb screw on the shroud.
2. Rotate the shroud until it is in the desired position to properly cut off glare.
3. Retighten the thumb screw to lock the shroud in place.

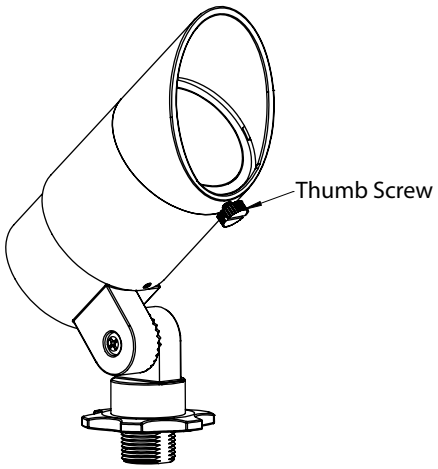

waclighting.com
Phone (800) 526.2588
Fax (800) 526.2585

Headquarters, East Manufacturing Facility
44 Harbor Park Drive
Port Washington, NY 11050

South East Manufacturing Facility
1600 Distribution Ct
Lithia Springs, GA 30122

Central Manufacturing Facility
1700 South J Elmer Freeway, Ste 100
Cedar Hill, TX 75104

West Manufacturing Facility
1750 S Archibald Ave
Ontario, CA 91761

WAC Lighting retains the right to modify the design of our products at any time as part of the company's continuous improvement program.

INSTALLATION INSTRUCTION
COLORSCAPING MINI ACCENT LIGHT
5810

ACCESSORIES

I. Lens Accessory:
Frosted, red, blue, green and amber lens accessories are used to alter the spectrum and distribution of the light coming out of the fixture.

Installation: Place the lens in between the fixture and the shroud. Tighten the thumb screw on the shroud to secure the lens in place.

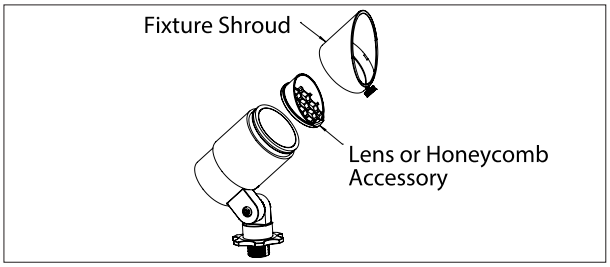

II. Surface Mount Accessory
The surface mount accessory is used to mount the fixture to a hard surface like wood or cement or as alternative to the mounting stake.

Installation: Mount the accessory to a hard surface using No. 10 Philips head screws that are at least half an inch long. If mounting on concrete or something similar, first use a plastic anchor sized for No. 10 screws. If mounting on a soft surface first attach the included spikes.

Create a route underneath the accessory for your wire to travel through. Lead your wire through the created route and screw your fixture onto the surface mount accessory.

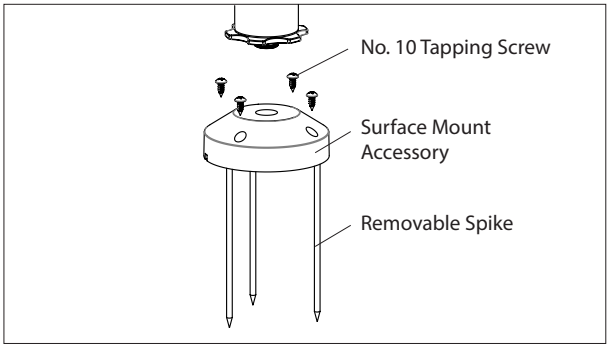

III. Tree Mount Accessory:
The tree mount accessory is a way for fixtures to be mounted on the trunk or a branch of a tree while minimizing damage to the tree.

Installation: Mark the screw hole locations at the point of installation. Thread one hex nut from flat side of wood screw bolt until end of threaded. Use a wrench to screw the bolt into the tree until the unthreaded portion of the bolt meets the surface of the tree. (Do this for all three bolts.) Place the tree mount bracket onto the bolts and secure it using additional hex nuts. Attach light fixture and lead wire through the bracket. Place all wire nuts into the tree mount bracket.

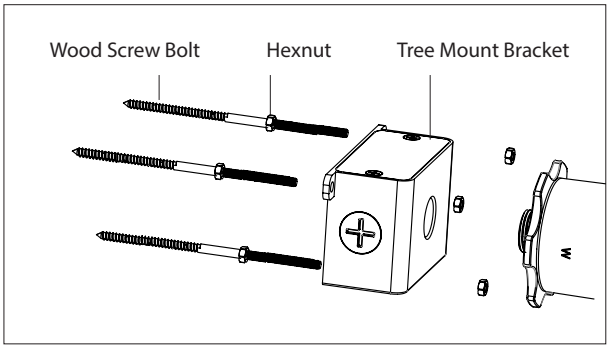

IV. Extension Accessory
Using extension rods and rod joiners, fixtures can be mounted away from a surface in any desired direction.
Rods come in 5 sizes: 4 inches, 8 inches, 12 inches, 18 inches, and 24 inches. These rods can be connected via either straight or 90 degree rod joiners.

Installation: Screw in a rod joiner into your mounting accessory. Screw an extension rod to the other side of the rod joiner. Continue to use rod joiners and extension rods until the fixture is in the desired position.

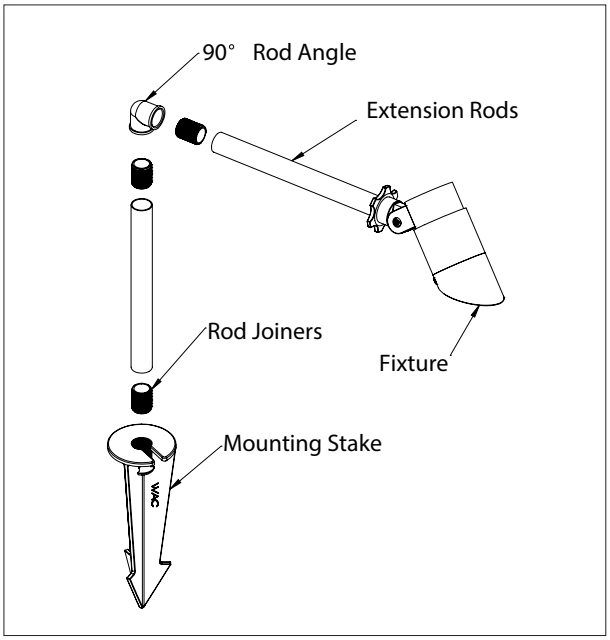

waclighting.com
Phone (800) 526.2588
Fax (800) 526.2585

Headquarters, East Manufacturing Facility
44 Harbor Park Drive
Port Washington, NY 11050

South East Manufacturing Facility
1600 Distribution Ct
Lithia Springs, GA 30122

Central Manufacturing Facility
1700 South J Elmer Freeway, Ste 100
Cedar Hill, TX 75104

West Manufacturing Facility
1750 S Archibald Ave
Ontario, CA 91761

WAC Lighting retains the right to modify the design of our products at any time as part of the company's continuous improvement program.